AC/DC METAL FACE FERROUS/NON-FERROUS SENSING (Teflon Coating)

M 12		M 12		M 18	
●	○	●	○	●	○
2 mm	4 mm	2 mm	4 mm	5 mm	8 mm
stainless steel		stainless steel		stainless steel	
●		●		●	

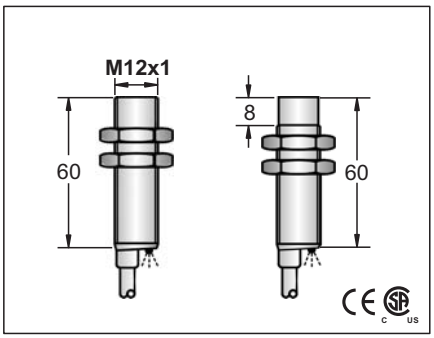

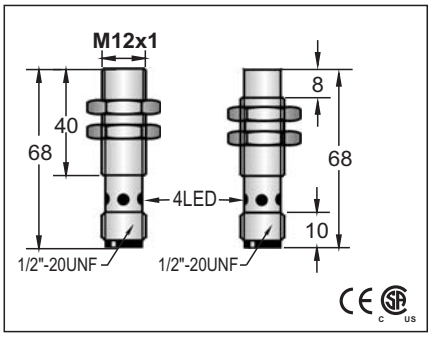

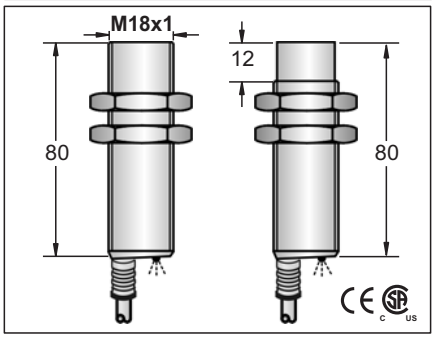

20-250 VAC, 50-60 Hz; 20-250 VDC		
DC RIPPLE <10%		
<2.5mA		
100mA		
<2.5mA		
2.2A for 20ms		
5mA		
<=10 VAC :<=8 VDC		
25HZ AC; 40 Hz DC		
10ms/10ms		
<15%(Sr)		
<1.0% (Sr)		
IP67		
-25°C- +75°C		
<10% (Sr)		
YES		
-		
-		
RFI>3V/m / EFT>1KV / ESD>4KV (contact)		
IEC 60947-5-2,Part 7.4.1 / IEC 60947-5-2,Part 7.4.2		
Stainless steel		
FCS1-1202U-A3L2/FE	11	FCS2-1204U-A3L2/FE
FCS1-1202U-B3L2/FE	12	FCS2-1204U-B3L2/FE
FCS1-1202U-A3L2/NFE	11	FCS2-1204U-A3L2/NFE
FCS1-1202U-B3L2/NFE	12	FCS2-1204U-B3L2/NFE
4ϕ3x0.34		
approx.77g		approx.76g

20-250 VAC, 50-60 Hz; 20-250 VDC		
DC RIPPLE <10%		
<2.5mA		
100mA		
<2.5mA		
2.2A for 20ms		
5mA		
<=10 VAC :<=8 VDC		
25HZ AC; 40 Hz DC		
10ms/10ms		
<15%(Sr)		
<1.0% (Sr)		
IP67		
-25°C- +75°C		
<10% (Sr)		
YES		
-		
-		
RFI>3V/m / EFT>1KV / ESD>4KV (contact)		
IEC 60947-5-2,Part 7.4.1 / IEC 60947-5-2,Part 7.4.2		
Stainless steel		
FCS1-1202U-AUL3/FE	56	FCS2-1204U-AUL3/FE
FCS1-1202U-BUL3/FE	56	FCS2-1204U-BUL3/FE
FCS1-1202U-AUL3/NFE	56	FCS2-1204U-AUL3/NFE
FCS1-1202U-BUL3/NFE	56	FCS2-1204U-BUL3/NFE
approx.30g		approx.29g

20-250 VAC, 50-60 Hz; 20-250 VDC		
DC RIPPLE <10%		
<2.5mA		
200mA		
<2.5mA		
2.2A for 20ms		
5mA		
<=10 VAC :<=8 VDC		
25HZ AC; 40 Hz DC		
10ms/10ms		
<15%(Sr)		
<1.0% (Sr)		
IP67		
-25°C- +75°C		
<10% (Sr)		
YES		
-		
-		
RFI>3V/m / EFT>1KV / ESD>4KV (contact)		
IEC 60947-5-2,Part 7.4.1 / IEC 60947-5-2,Part 7.4.2		
Stainless steel		
FCS1-1805U-A3L2/FE	11	FCS2-1808U-A3L2/FE
FCS1-1805U-B3L2/FE	12	FCS2-1808U-B3L2/FE
FCS1-1805U-A3L2/NFE	11	FCS2-1808U-A3L2/NFE
FCS1-1805U-B3L2/NFE	12	FCS2-1808U-B3L2/NFE
5.0ϕ44x0.1		
approx.161g		approx.160g

xxxx-xxxxx-xxxx/FE → Target material: Ferrous

xxxx-xxxxx-xxxx/NFE → Target material: Non-Ferrous

Correction factors

Series	Mild steel	Stainless steel	Aluminum	Copper	Brass
FE	1	0.7-0.9	0	0	0
NFE	0	0	1	1.1	0.9

Note:
Coming Soon : Part numbers with underline

AC/DC METAL FACE FERROUS/NON-FERROUS SENSING (Teflon Coating)

M 18		M 18		M 30	
●	○	●	○	●	○
5 mm	8mm	5 mm	8mm	10mm	15mm
stainless steel		stainless steel		stainless steel	
●		●		●	

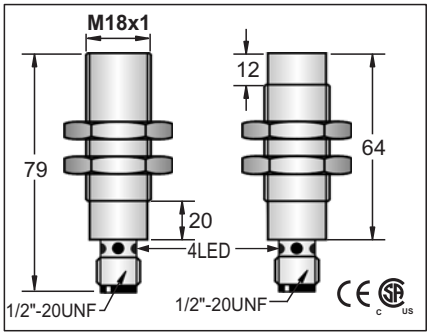

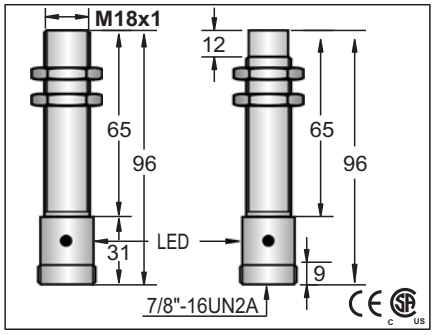

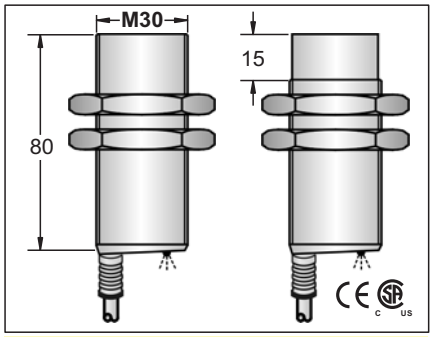

20-250 VAC, 50-60 Hz; 20-250 VDC	20-250 VAC, 50-60 Hz; 20-250 VDC	20-250 VAC, 50-60 Hz; 20-250 VDC
DC RIPPLE <10%	DC RIPPLE <10%	DC RIPPLE <10%
<2.5mA	<2.5mA	<2.5mA
200mA	200mA	200mA
<2.5mA	<2.5mA	<2.5mA
2.2A for 20ms	2.2A for 20ms	2.2A for 20ms
5mA	5mA	5mA
<=10 VAC :<=8 VDC	<=10 VAC :<=8 VDC	<=10 VAC :<=8 VDC
25HZ AC; 40 Hz DC	25HZ AC; 40 Hz DC	25HZ AC; 40 Hz DC
10ms/10ms	10ms/10ms	10ms/10ms
<15%(Sr)	<15%(Sr)	<15%(Sr)
<1.0% (Sr)	<1.0% (Sr)	<1.0% (Sr)
IP67	IP67	IP67
-25°C- + 70°C	-25°C- + 70°C	-25°C- + 70°C
<10% (Sr)	<10% (Sr)	<10% (Sr)
YES	YES	YES
-	-	-
-	-	-
RFI>3V/m / EFT>1KV / ESD>4KV (contact)	RFI>3V/m / EFT>1KV / ESD>4KV (contact)	RFI>3V/m / EFT>1KV / ESD>4KV (contact)
IEC 60947-5-2,Part 7.4.1 / IEC 60947-5-2,Part 7.4.2	IEC 60947-5-2,Part 7.4.1 / IEC 60947-5-2,Part 7.4.2	IEC 60947-5-2,Part 7.4.1 / IEC 60947-5-2,Part 7.4.2
Stainless steel	Stainless steel	Stainless steel

FCS1-1805U-AUL3/FE	56	FCS2-1808U-AUL3/FE	FCS1-1805U-AZL3/FE	65	FCS2-1808U-AZL3/FE	FCS1-3010U-A3L2/FE	11	FCS2-3015U-A3L2/FE
FCS1-1805U-BUL3/FE	56	FCS2-1808U-BUL3/FE	FCS1-1805U-BZL3/FE	65	FCS2-1808U-BZL3/FE	FCS1-3010U-B3L2/FE	12	FCS2-3015U-B3L2/FE
FCS1-1805U-AUL3/NFE	56	FCS2-1808U-AUL3/NFE	FCS1-1805U-AZL3/NFE	65	FCS2-1808U-AZL3/NFE	FCS1-3010U-A3L2/NFE	11	FCS2-3015U-A3L2/NFE
FCS1-1805U-BUL3/NFE	56	FCS2-1808U-BUL3/NFE	FCS1-1805U-BZL3/NFE	65	FCS2-1808U-BZL3/NFE	FCS1-3010U-B3L2/NFE	12	FCS2-3015U-B3L2/NFE

xxxx-xxxxx-xxxx/FE → Target material: Ferrous

xxxx-xxxxx-xxxx/NFE → Target material: Non-Ferrous

Correction factors

Series	Mild steel	Stainless steel	Aluminum	Copper	Brass
FE	1	0.7-0.9	0	0	0
NFE	0	0	1	1.1	0.9

		5.8 ϕ 3x0.5
approx.69g	approx.68g	approx.94g	approx.91g	approx.247g	approx.237g

Note:
Coming Soon : Part numbers with underline

AC/DC METAL FACE FERROUS/NON-FERROUS SENSING (Teflon Coating)

M 30		M 30	
●	○	●	○
10 mm	15 mm	10 mm	15 mm
stainless steel		stainless steel	
●		●	

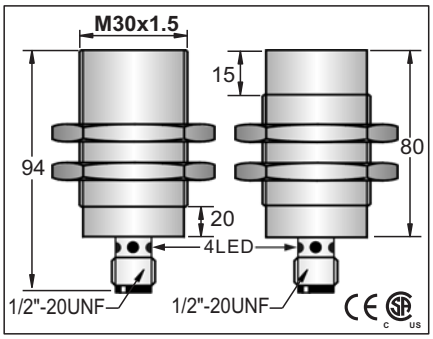

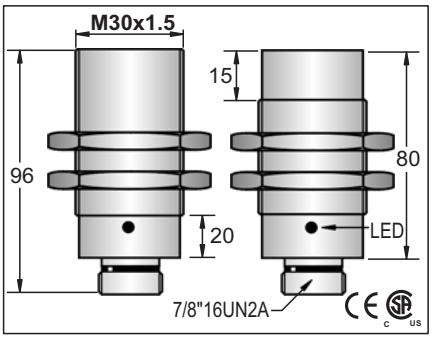

20-250 VAC, 50-60 Hz; 20-250 VDC	20-250 VAC, 50-60 Hz; 20-250 VDC
DC RIPPLE <10%	DC RIPPLE <10%
<2.5mA	<2.5mA
200mA	200mA
<2.5mA	<2.5mA
2.2A for 20ms	2.2A for 20ms
5mA	5mA
<=10 VAC :<=8 VDC	<=10 VAC :<=8 VDC
25HZ AC; 40 Hz DC	25HZ AC; 40 Hz DC
10ms/10ms	10ms/10ms
<15%(Sr)	<15%(Sr)
<1.0% (Sr)	<1.0% (Sr)
IP67	IP67
-25°C - +70°C	-25°C - +70°C
<10% (Sr)	<10% (Sr)
YES	YES
-	-
-	-
RFI>3V/m / EFT>1KV / ESD>4KV (contact)	RFI>3V/m / EFT>1KV / ESD>4KV (contact)
IEC 60947-5-2,Part 7.4.1 / IEC 60947-5-2,Part 7.4.2	IEC 60947-5-2,Part 7.4.1 / IEC 60947-5-2,Part 7.4.2
Stainless steel	Stainless steel

FCS1-3010U-AUL3/FE	56	FCS2-3015U-AUL3/FE	FCS1-3010U-AZL3/FE	65	FCS2-3015U-AZL3/FE
FCS1-3010U-BUL3/FE	56	FCS2-3015U-BUL3/FE	FCS1-3010U-BZL3/FE	65	FCS2-3015U-BZL3/FE
FCS1-3010U-AUL3/NFE	56	FCS2-3015U-AUL3/NFE	FCS1-3010U-AZL3/NFE	65	FCS2-3015U-AZL3/NFE
FCS1-3010U-BUL3/NFE	56	FCS2-3015U-BUL3/NFE	FCS1-3010U-BZL3/NFE	65	FCS2-3015U-BZL3/NFE

xxxx-xxxxx-xxxx/FE → Target material: Ferrous

xxxx-xxxxx-xxxx/NFE → Target material: Non-Ferrous

Correction factors

Series	Mild steel	Stainless steel	Aluminum	Copper	Brass
FE	1	0.7-0.9	0	0	0
NFE	0	0	1	1.1	0.9

approx.147g	approx.137g
approx.187g	approx.179g